BAYSWATER

London W.2

CODE: BAYT410 **DESCRIPTION:** Wall Mounted Bsm/Lever/Hex Collar **CATEGORY:** Taps

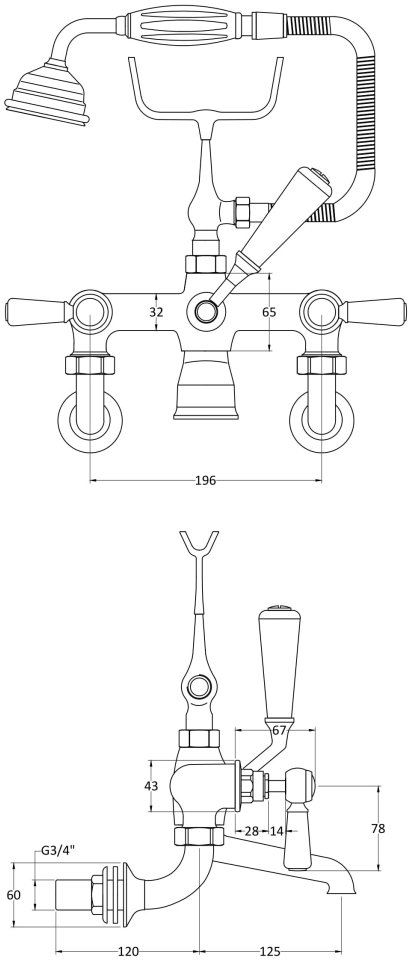

PRODUCT DIMENSIONS				
Height (mm)	Width (mm)	Depth (mm)	Length (mm)	Nett Wgt Kg
320	350	155		4.7

PACKAGING DIMENSIONS			
Height (mm)	Width (mm)	Depth (mm)	Gross Wgt Kg
330	232	150	4.9

PACKAGING DATA			
Box Colour	White Cardboard Box		
Box Qty	1	Label Colour	White Label
Label Size	100 X 50	Label Qty	1

OUTER BOX DIMENSIONS (If Applicable)				
Height (mm)	Width (mm)	Depth (mm)	Length (mm)	Gross Wgt Kg
330	520	360		23
Barcode	5055275896143			

PRODUCT DETAILS			
Country of Origin	United Kingdom		
Fitting Instruction	Yes		
Product Material	Brass		
Control Type	Manual		
Waste Included	Waste Not Included		
WRAS Approval	No	Approval No.	N/A
Operating Pressure (bar)	0.2		
Valve/Cartridge Type	1/4 Turn Ceramic Disc		

Colour/Finish	Chrome									
Mount Type	Wall									
Waste Type	Not Applicable									
Flow Rates (L/min)	0.1	10.6	0.5		1	41.4	2	59	3	72.8
Pipe Size	22 mm (3/4" Bsp)									
Pipe Centres	196mm									