TECHNICAL DRAWING

COLLECTION: ALTITUDE
PRODUCT CODE: ALT-100/CC-C/P

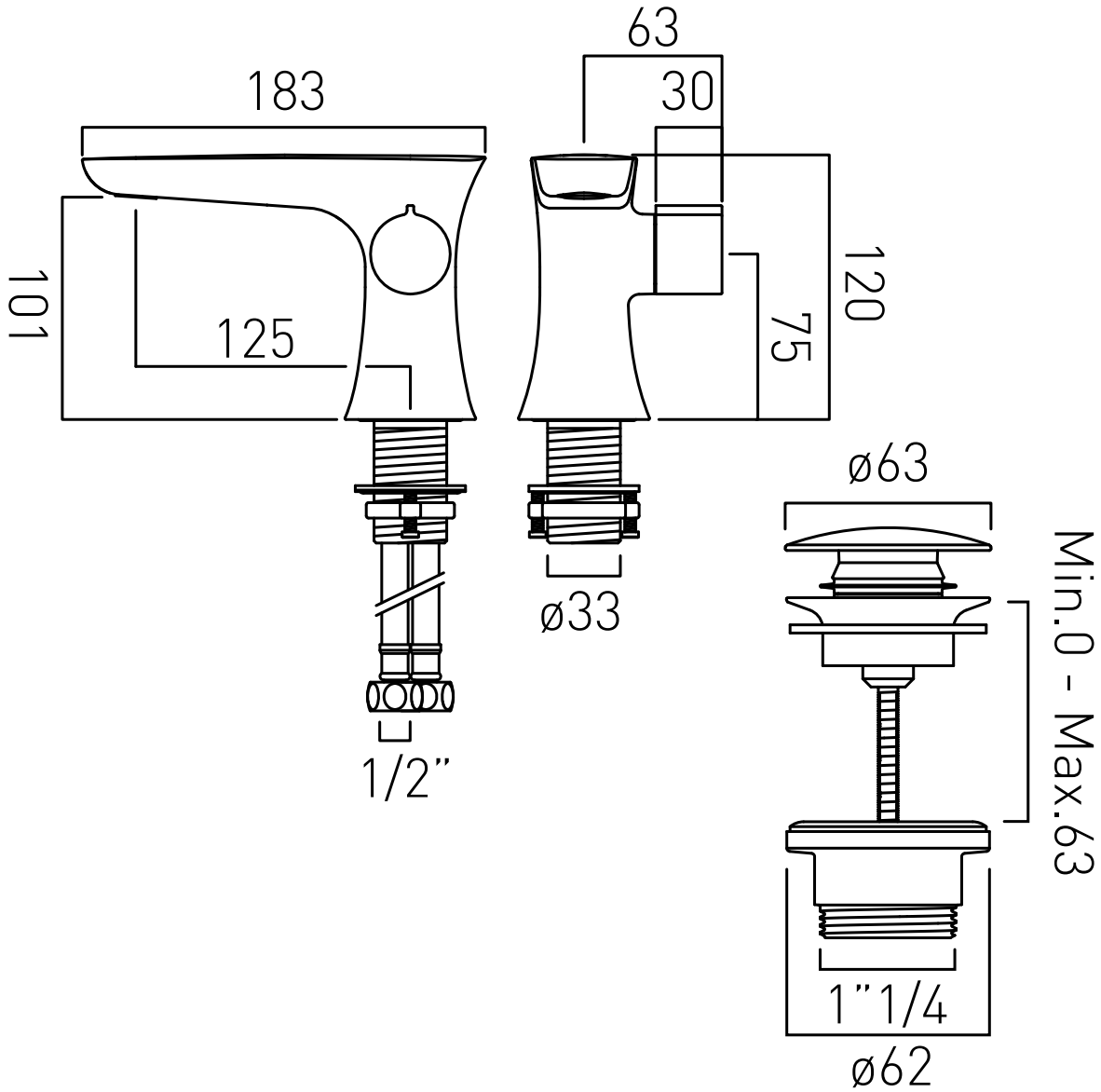

tel: 01934 744466
email: sales@vado.com
www.vado.com

where inspiration flows
taps | showering | accessories

VADO