BC Designs
The Design Works
Allens Farm
Colchester,
Essex
CO7 7BN
Tel: 01206 827100
Website: www.bcdesigns.co.uk

CUSTOMER SPECIFICATION SHEET - BATHS

SALES CODE:	BAB075	DESCRIPTION:	DIVITA BATH

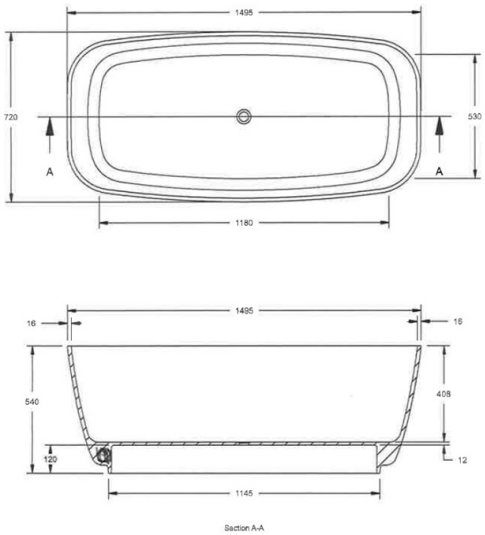

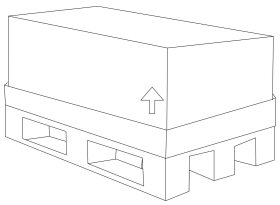

PRODUCT DIMENSIONS			
Length (mm)	Width (mm)	Depth (mm)	Nett Wgt Kg
1495	721	540	82

PACKAGING DIMENSIONS			
Length (mm)	Width (mm)	Depth (mm)	Gross Wgt Kg

PACKAGING DATA			
Box Colour	Brown Cardboard Box		
Box Qty	1	Label Colour	White Label
Label Size	100 X 50	Label Qty	1

OUTER BOX DIMENSIONS (If Applicable)			
Length (mm)	Width (mm)	Height (mm)	Gross Wgt Kg
1710	780	740	105
Barcode			

PRODUCT DETAILS							
Country of Origin	South Africa			Certification	FSC	No	CE	No
Fitting Instruction	Yes			Material Colour Ref'	European White			
Product Material	Cian			Material Thickness	16mm			
Volume (Ltr)	175			Displaced Capacity	105			
Leg Set Inc'	Legset Not Included			Waste Inc'	Waste Not Included			
Drilled/Undrilled	Undrilled For Taps			Includes Grips	No Grips Supplied			
Embossed	No			No of Tapholes	None			
Anti-Slip	No							