TECHNICAL DRAWING

COLLECTION: DX COMPONENT KITS
PRODUCT CODE: CEL-148D/3/RO-TRIM

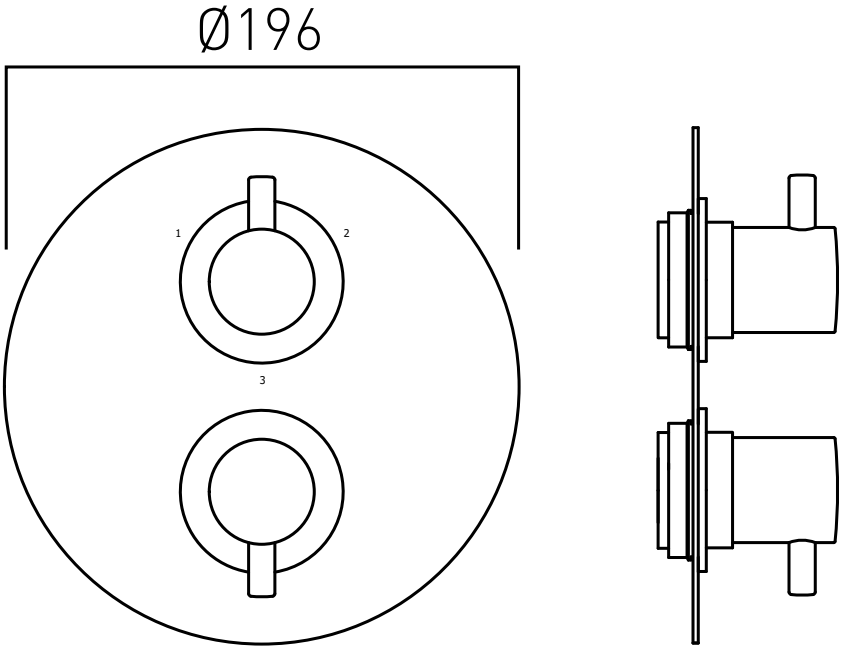

tel: 01934 744466
email: sales@vado.com
www.vado.com

where inspiration flows
taps | showering | accessories

VADO