TECHNICAL DRAWING

COLLECTION: NOTION SHOWERS
PRODUCT CODE: NOT-148D-C/P

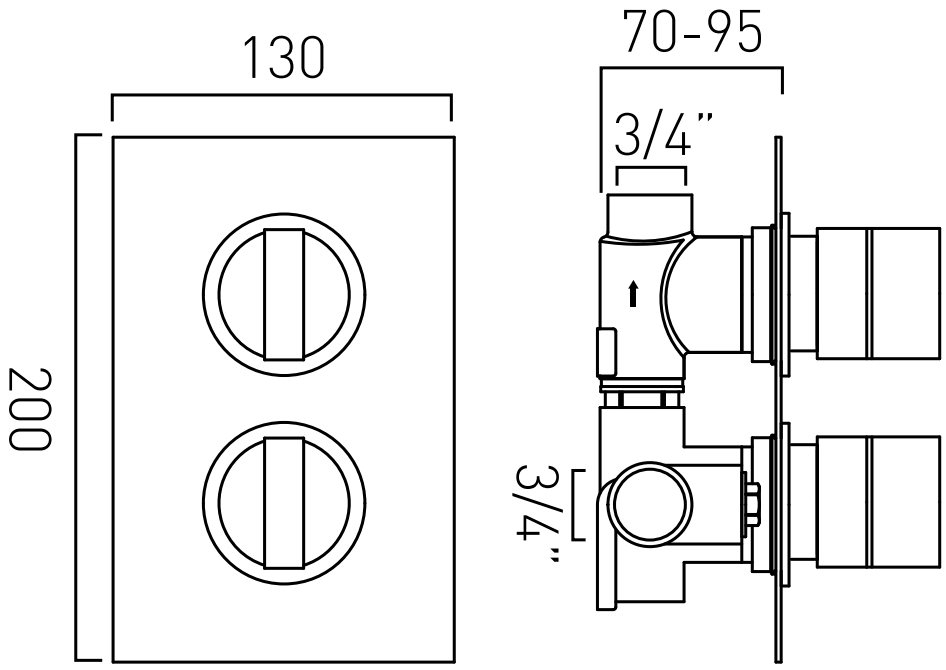

tel: 01934 744466
email: sales@vado.com
www.vado.com